RES X07-2U22R

22" Depth, Rugged 2U Rack Server

2U short-depth rugged edge server with max configurability

- Dual Intel® 3rd Gen Xeon® SP CPUs plus up to 3x NVIDIA 300W GPU accelerators
- Low-latency PCIe Gen4 I/O and storage architecture: up to 6x PCIe slots and 8x removable E1.L NVMe SSDs
- Patented ruggedization with MIL-STD qualification testing
- Made in USA for mission-critical HPC/AI/sensor processing with AS9100 aerospace-grade quality

Mercury's 2U22R model in the RES X07 rugged edge server family integrates high-performance, data-center class COTS computing technologies in a short-depth 2U chassis for space-constrained applications. With proprietary ruggedization to support dual CPUs, three GPU cards, and high-density removable data storage, the 2U22R is one of the densest, most versatile rugged computing platforms available for tackling challenging artificial intelligence (AI), high performance computing (HPC), and sensor processing workloads at the edge.

Trust Mercury for Modified COTS

For decades, system integrators have relied on Mercury to build the most rugged, COTS-based solutions for mission-critical programs across domains. Our talented engineering team can optimize the RES X07-2U22R to meet your specific program requirements.

Highlights

- Optimized for mission-critical high-speed data ingest, processing, networking, and storage in SWaP-constrained rack architectures deployed in harsh environments
- Dual Intel 3rd Gen Xeon-SP CPUs (up to 80 cores total) with built-in AI and security workload accelerators, plus low-latency PCIe gen 4.0 throughput
- Six I/O expansion slots, including support for up to three 300 W GPU accelerator cards or up to 16x removable Flash disks in short-depth RIO chassis (two configurations, 2U22RA is storage-density optimized and 2U22RB is GPU-density optimized)
- Advanced security capability for hardware, software, and firmware for secure data-at-rest, data-in-transit, and data in-use
- Front removable CMOS battery and SSDs; rear removable power supplies
- OCP 3.0 slot and PCIe Gen4 slots to support up to 200 Gbps Ethernet/Infiniband
- Ruggedized chassis includes patented/proprietary shock, vibration, thermal management, and serviceability features to ensure reliability

Technical Specifications

DATA CENTER-CLASS PROCESSOR ARCHITECTURE

- Dual-socket Intel 3rd Gen Xeon Scalable processor CPUs (formerly Ice Lake-SP), x86-64, up to 40 cores per CPU (80 cores total)*
- Thermally optimized for two 165 W TDP CPUs at extended temps with options up to 270 W per CPU with reduced thermals**
- Built-in workload and service accelerator engines for AI/security/vector processing (e.g., Intel Deep Learning Boost, Intel AVX-512, Intel SGX, Intel Cypto Acceleration, etc.)
- Intel Virtual RAID on CPU (VROC) key option to enable low-latency NVMe SSD performance

HIGH-DENSITY, HIGH-SPEED MEMORY

- Up to 2 TB total DDR4-3200MHz ECC registered RAM memory, 16x DIMM slots

ADVANCED SECURITY CAPABILITIES

- Integrated TPM 2.0 compliant TCG 2.0 secure crypto-processor module
- Intel TXT, PFR, SGX, TME, Crypto Accel, QuickAssist for Zero Trust security
- Self-encrypting FIPS 140-2/3 Flash storage options
- NVIDIA Bluefield Data Processing Unit (DPU) options for security offload
- NVIDIA Network controller options to accelerate in-line encryption/decryption
- Tamper-resistant storage sleds with key-lock option

RESX07-2U22RA Front View

RESX07-2U22RA Rear View

HIGH-BANDWIDTH ETHERNET/INFINIBAND NETWORKING

- OCP 3.0 network controller slot (1/10/25/40/50/100/200 Gbps options)
- PCIe Gen 4 slots for network controllers (1/10/25/40/50/100/200 Gbps options)

MANAGEMENT AND OS SUPPORT

- Linux (Ubuntu LTS default; RHEL optional), Windows Server options
- VMware ESXi virtual machine (VM) hypervisor compatible
- Redfish and IMPI 2.0 management

MODULAR HIGH-SPEED I/O EXPANSION SLOTS

Up to 6x expansion slots:

- 2U22RA Configuration (storage-optimized):
  - Slot 1: PCIe 4.0 x16 dual-width, full-height, full-length (FHFL), 12.0" depth w/RIO (compatible with 300 W NVIDIA GPU), NVLink support available
  - Slot 2: PCIe 4.0 x16 (x8 electrical) dual-width, full-height, full-length (FHFL), 12.0" depth w/RIO (compatible with 300 W NVIDIA GPU), NVLink support available
  - Slot 3: PCIe 4.0 x8 single-width, half-height half-length (HHHL), 5.0" depth w/FIO
  - Slot 4: PCIe 4.0 x16 single-width, half-height half-length (HHHL), 7.5" depth w/RIO
  - Slot 5: PCIe 4.0 x16 (x8 electrical) single-width, half-height half length (HHHL), 7.5" depth w/RIO
  - Slot 6: OCP 3.0 gen 4.0 x16 w/RIO
- 2U22RB Configuration (GPU-optimized):
  - Slot 1: PCIe 4.0 x16 dual-width, full-height, full-length (FHFL), 12.0" depth w/RIO (compatible with 300 W NVIDIA GPU), NVLink support available
  - Slot 2: PCIe 4.0 x16 dual-width, full-height, full-length (FHFL), x16 electrical, 12.0" depth w/RIO (compatible with 300 W NVIDIA GPU), NVLink support available
  - Slot 3: PCIe 4.0 x16 dual-width, full-height full-length (FHFL), 12.0" depth w/RIO (compatible with 300 W NVIDIA GPU)
  - Slot 4: PCIe 4.0 x16 single-width, half-height half-length (HHHL), 7.5" depth w/RIO
  - Slot 5: PCIe 4.0 x16 (x8 electrical) single-width, half-height half length (HHHL), 7.5" depth w/RIO
  - Slot 6: OCP 3.0 gen 4.0 x16 w/RIO

BASELINE INTEGRATED I/O

- 2x USB 3.0 ports (2x rear)
- 1x VGA port (rear)
- 1x RS232 serial port (rear)
- 1x RJ-45 IPMI port (rear)
- Remote battery (front)

HIGH-SPEED DATA STORAGE

- 2U22RA Configuration (storage-optimized):
  - Up to 8x removable E1.L SSD rulers (Gen4 x4 NVMe EDSFF form factor), front access
  - And/or up to 8x removable 2.5" form factor 7 mm SATA3 6 GBps SSDs or 4x removable 2.5" form factor 15 mm U.2 NVMe PCIe Gen4 x4 SSDs, front access drive sleds with thumb screws
  - Up to 2x internal NVMe Gen4 x4 M.2 SSD slots
- 2U22RB Configuration (GPU-optimized):
  - Up to 4x removable E1.L SSD rulers (Gen4 x4 NVMe EDSFF form factor), front access
  - And/or up to 8x removable 2.5" form factor 7 mm SATA3 6 GBps SSDs or 4x removable 2.5" form factor 15 mm U.2 NVMe PCIe Gen4 x4 SSDs, front access drive sleds with thumb screws
  - Up to 2x internal NVMe Gen4 x4 M.2 SSD slots
- Standard enterprise or FIPS 140-2 encryption options; compatible with FIPS 140-3 and NIAP Common Criteria certified SSDs
- RAID redundancy with integrated Intel VROC key option or add-on RAID controller card options
- Patented read-only or R/W-selectable switch for removable SATA SSD sleds (optional)
- Optional key-lockable drive trays to prevent unauthorized access

ROBUST POWER SUPPLY OPTIONS

- Removable single or dual/redundant M1K form factor PSU modules (rear)
- Input voltage options: 120 V AC, 240 V AC, 28 V DC, 48 V DC, or 240 V DC
- Max combined power output: up to 2400 W @ 120 V AC/ 3200 W @ 240 V AC/1600 W @ 28 V DC/2000 W @ 48 V DC
- Filtered MIL-STD-461 CE102 compliant power supply available with external accessory option: up to 1500 W @ 120 V AC

MECHANICAL

- Form Factor: 19" rackmount short-depth 2U chassis
- Height: 2U or 3.5" (88.9 mm)
- Width: 17" (432.0 mm), EIA-310/RETMA rack-mountable (rail kits optional)
- Depth: 22" (558.8 mm) from front to back, 21" (533.4 mm) from rack ears to back
- Weight (typical)**: estimated at 37 lb.
- Hardened Finish: Powder coating over Iridite-treated aluminum and passivated stainless steel
- Designed with materials compliant to RoHS and REACH-prohibited substance restrictions

PATENTED OR ADVANCED RUGGEDIZATION

- Patented air baffle channel technology optimizes airflow over high-TDP devices
- Proprietary system control module (SCM) for temperature monitoring and adaptive fan control
- High-speed, high-volume fans to ensure maximum airflow over crucial system components
- Shock-hardened PCIe 3-axis board stiffener brackets
- Memory retention clips for DRAM shock resistance while retaining serviceability
- Lightweight aluminum chassis with stainless steel reinforcement

RESX07-2U22RB Front View

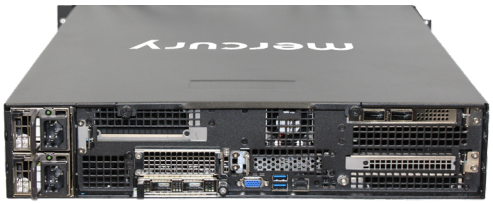

RESX07-2U22RB Rear View

Technical specifications (cont.)

PATENTED OR ADVANCED RUGGEDIZATION (CONTINUED)

- Electrical interference input filtering and cable shielding
- Conformal coated power supply default; full conformal coat kit option
- Staking option for connectors or large components for severe environments
- Optional protections for salt-fog/corrosion/fungus/dust ingress

ENVIRONMENTAL **

- Baseline qualification testing to Mercury Servers Rugged Level 1 (RL1) standard for demanding military, aerospace, and industry deployment:
  - Temp: 0° to +50°C operation/-40° to +71°C storage, MIL-STD-810H
  - Shock: 20G@11ms operation, MIL-STD-810H
  - Vibration (random): 5Hz-2000Hz, non-operating random, MIL-STD-810H
  - Vibration (sinusoidal sweep, dwell): 4Hz-33Hz operation, MIL-STD-167-1A
  - Altitude: 12.5K ft operation/40K ft storage, MIL-STD-810H
  - Humidity: up to 95% NC, MIL-STD-810G
  - EMC/Safety: MIL-STD-461G CE102, RE102
  - Safety: MIL-STD-882; CE Mark conformity
  - Airborne Noise: MIL-STD-1474D
- Customer-specific configuration compliance will be configuration dependent
- NVIDIA Certification - with integrated A100 GPUs
- Optional conformal coating kit for condensing humidity
- Optional EMI hardening for expanded MIL-STD-461 compliance
- Optional delta qual testing – expanded MIL-STD-810, MIL-STD-461, or DO-160 testing

SERVICEABILITY

- Removable remote CMOS battery on front panel to avoid downtime and quickly replace battery in field while system is running
- Field replaceable units (FRUs), including removable PSU, SSDs, OCP card, CMOS battery
- Front-panel system power and drive activity indicators, including power on/off switch

OPTIONAL ACCESSORIES

- Rail mount options: fixed mount (front and rear) or slide rails
- Spare field replacement units (PSUs, SSD drive trays)
- Power cords: USA/European
- Dust filter bezel

CONFIGURATION SERVICE OPTIONS

- Environmental Stress Screening (ESS)
- Configuration control services
- Configuration-specific ICD drawings/CAD models
- Configuration-specific MTBF analysis, Letter of Volatility (LoV), EQT test reports
- Lifecycle extension obsolescence management services
- Minor to major mechanical modifications to chassis

REGULATORY/EXPORT COMPLIANCE

- CE Mark conformity declaration, safety certification, RoHS/REACH compliance
- Dual-use EAR export control (configuration dependent)
- Mercury is ITAR registered and compliant to support military program requirements
- Country of Origin/TAA-Compliance: designed and manufactured in USA
- Quality Management: mature ISO 9001 and AS9100 quality manufacturing process
- Modular Open Architecture Approach (MOSA): aligned with standards-based interfaces and interoperable with multi-vendor COTS cards
- AS5553-compliant counterfeit parts prevention program with vetted supply chain
- Product designs and customer information protected by Mercury's DFARS 252.204-7012 and NIST SP 800-171A-compliant IT infrastructure

* Roadmapped feature/capability
** Products designed to meet or exceed listed datasheet specifications. Some specifications including I/O, weight, and thermal profiles are configuration dependent. Contact factory for more information.

Block diagrams

STORAGE OPTIMIZED RES X07-2U22RA BLOCK DIAGRAM

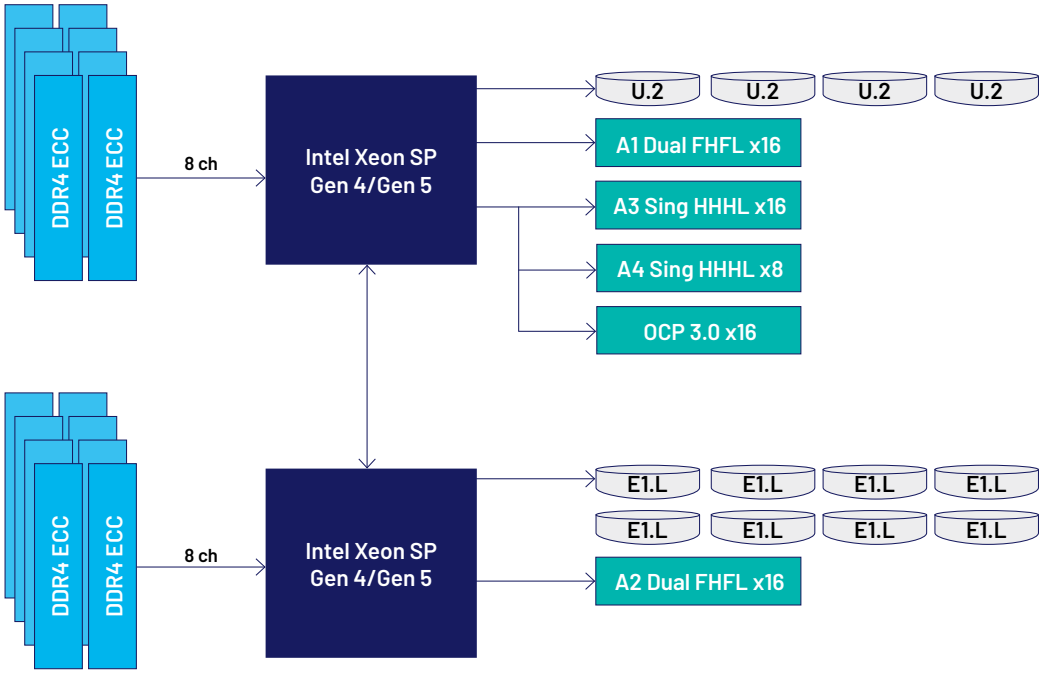

GPU OPTIMIZED RES X07-2U22RB BLOCK DIAGRAM

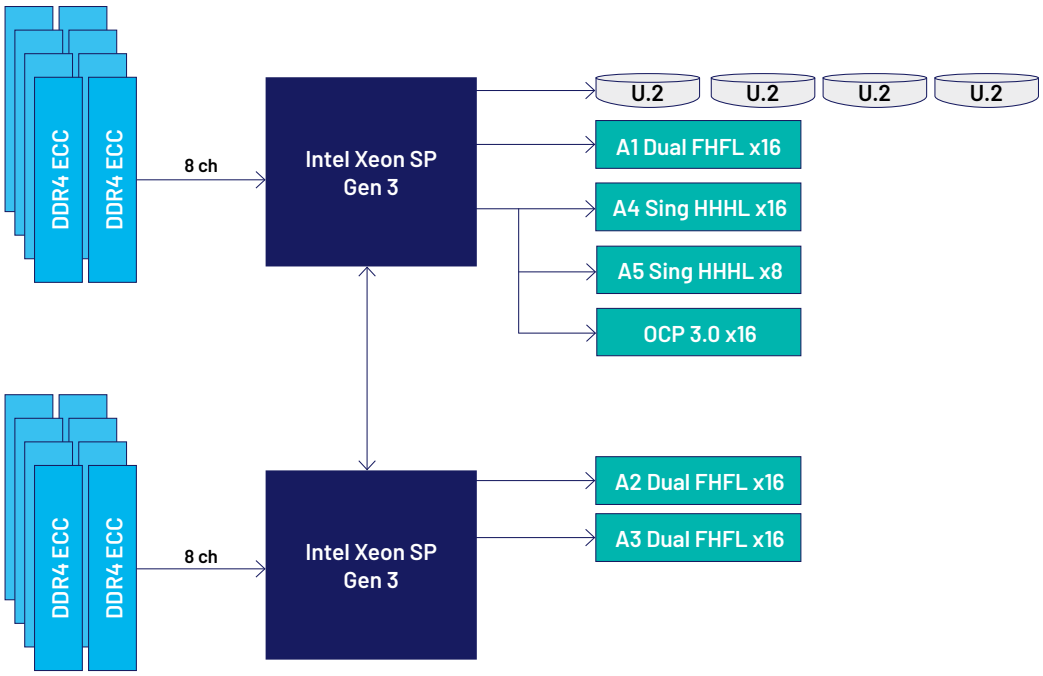

APPLICATIONS

High-performance computing (HPC)	Machine learning/deep learning (ML/DL)	Signals intelligence (SIGINT)	5G-based workloads
Sonar/radar signal processing	Virtual reality (VR)/augmented reality (AR)	Industrial automation	Big data analytics
Sensor and image processing	High performance simulation	C5ISR	Electronic warfare (EW)
Artificial intelligence (AI) inferencing		Heterogeneous accelerated copro-cessing (GPUs, FPGAs)	Virtualization

CONFIGURATION MODEL CHART

RES X07 - 2U 22 R X

Config Field
A: Storage optimized (2x double-width full-depth GPU support, up to 8x SATA SSDs + up to 8x E1.L NVMe Drives)
B: GPU optimized (3x double-width full-depth GPU support, up to 8x SATA SSDs + 4x E1.L NVMe Drives

I/O Direction
R: Rear I/O

Depth
22: 22 inches

Height
1U: One rack unit

Generation
X08: Intel 4th/5th Gen Xeon Scalable Processor CPUs

Product Line
RES

Partnering with

Corporate Headquarters
50 Minuteman Road
Andover, MA 01810 USA
+1 978.967.1401 tel
+1 866.627.6951 tel
+1 978.256.3599 fax

Mercury EMEA
Avenue Eugène-Lance, 38
PO Box 584
CH-1212 Grand-Lancy 1
Geneva, Switzerland
+41 22 884 51 00 tel

Learn more
Visit: mrcy.com/servers
Contact: servers@mrcy.com

The Mercury Systems logo is a registered trademark of Mercury Systems, Inc. Other marks used herein may be trademarks or registered trademarks of their respective holders. Mercury products identified in this document conform with the specifications and standards described herein. Conformance to any such standards is based solely on Mercury's internal processes and methods. The information contained in this document is subject to change at any time without notice.

MADE IN USA

© 2026 Mercury Systems, Inc. 6594.04E-0926-ds-RESX07-2U22R