## RF SHIELDED MODULE DETAILS

### Top View

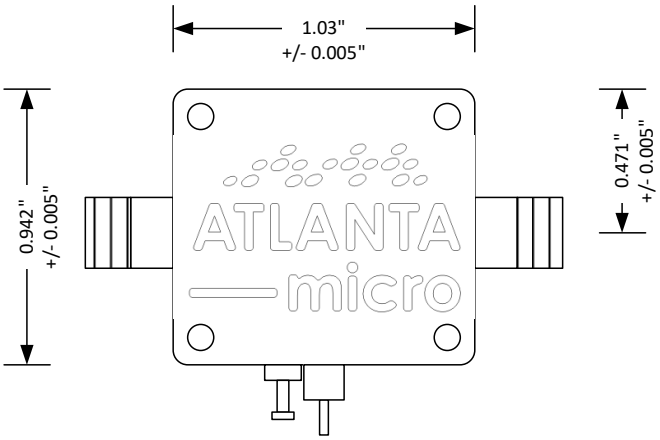


### Bottom View

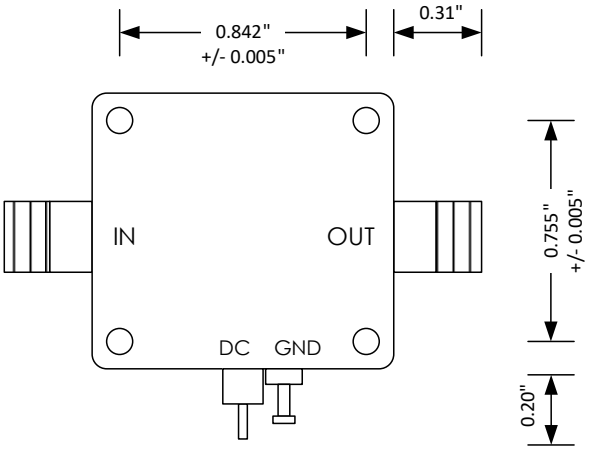


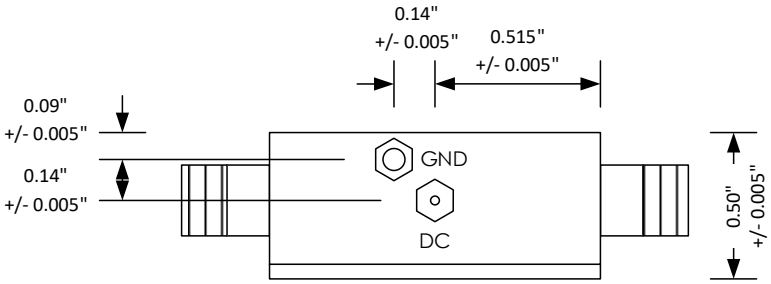


### Front View

**Notes:**
1. All dimensions shown are in inches
2. Module material: Aluminum
3. Mounting Holes: 4-40 threaded from top side
4. RF I/O Interface: SMA 2.9 (K)
5. Power via metal turrets labeled "DC"

## REVISION HISTORY

| Date | Revision | Notes |
|---|---|---|
| April 8, 2020 | 1 | Initial Release. |
| May 24, 2021 | 2 | Module Dimensions Changed. |
| July 9, 2021 | 3 | Orientation corrected, DC and GND pins shown on wrong side previously. |
| August 14, 2024 | 4 | Changed to Mercury branding. No content changes. |
| May 21, 2026 | 5 | Corrected Tolerances |

**For technical details, contact: MMICsupport@mrcy.com**
**For pricing details, contact: MMICsales@mrcy.com**

The Mercury Systems logo is a registered trademark of Mercury Systems, Inc. Other marks used herein may be trademarks or registered trademarks of their respective holders. Mercury products identified in this document conform with the specifications and standards described herein. Conformance to any such standards is based solely on Mercury's internal processes and methods. The information contained in this document is subject to change at any time without notice.

MADE IN USA

© 2026 Mercury Systems, Inc. 5-0-2026-05-21-MD HF Amplifier Module-VDDonRFOut Amplifier