SPEC SHEET

Bandpass Filter Ku1953

mercury systems™

Specifications are subject to change without notice

Electrical Specifications (+25°C)

Parameter	Value
Passband	18,500 - 20,500 MHz
Insertion loss	1.0 dB
VSWR	1.4:1
Rejection	65 dB from 1 - 16,000 MHz
Rejection	65 dB from 23,500 - 25,000 MHz
Connectors	SMA female
Package Size	0.62″ x 0.62″ x 2.25″
Connectors	“K” female
Operating temperature	-40°C to +50°C
Package Size	0.5″ x 0.5″ x 2.5″

Features

Cavity Design
Low Loss

Applications

Portable satellite
Satcom

Outline Drawing

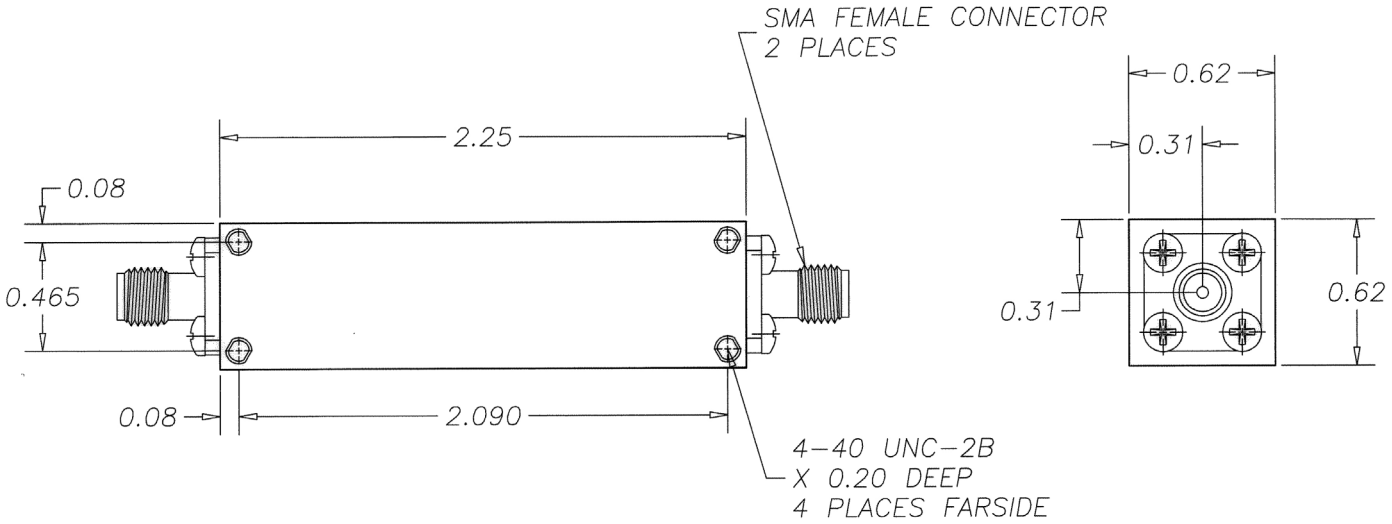

All dimensions are in inches

Need More Help? Need a Variant of This Product?

Contact Mercury’s RF & Microwave engineering team at **rf.microwave@mrcy.com** or visit **www.mrcy.com/rf** for a detailed listing of RF and Microwave products.

MADE IN AMERICA

Corporate Headquarters • 50 Minuteman Road • Andover, MA 01810 USA • (978) 967-1401 • (866) 627-6951 • Fax (978) 256-3599 • www.mrcy.com